MISCOM7216G-8GF-8GT

16-Port Managed Gigabit Industrial Ethernet Switch



- 8 × 1000Base-X SFP slots and 8 × 10/100/1000Base-T(X) RJ45 ports
- MW-RingV1/V2, ERPS, STP/RSTP and MRP redundancy
- VLAN, QoS, link aggregation and multicast management
- Web-based management, SNMP, RMON and diagnostic tools
- Dual redundant 12–60 VDC or single AC/DC power input options
- IP40 aluminum alloy enclosure; −40°C to +75°C operation

Product Description

The Maisvch MISCOM7216G-8GF-8GT series is a 16-port Layer 2 managed industrial Gigabit Ethernet switch with eight Gigabit SFP slots and eight auto-sensing Gigabit RJ45 ports. Fiber and copper interfaces support connections between network locations and local Ethernet equipment. The SFP slots also support 100Base-FX operation with suitable Maisvch-recommended modules.

Ring redundancy, VLAN, QoS, access control and network diagnostics help you configure and maintain industrial networks. Both power models use standard 35 mm DIN-rail mounting and an IP40 aluminum alloy enclosure. The −40°C to +75°C operating range supports industrial automation, energy, smart-city, intelligent transportation and smart-factory networks.

Features and Benefits

- Flexible fiber and copper connectivity: eight Gigabit SFP slots and eight Gigabit RJ45 ports; SFP slots also support 100Base-FX operation.
- Network redundancy: MW-RingV1/V2, ERPS, STP/RSTP and MRP support redundant network designs and link-failure recovery.
- Traffic management: IEEE 802.1Q VLAN, QoS, port rate limiting, storm control, static link aggregation and LACP.
- Multicast and access control: IGMP Snooping, GMRP, ACLs, IEEE 802.1X and TACACS+.
- Monitoring and diagnostics: Web-based management, SNMP, RMON, LLDP, port mirroring, Ping, DDM and cable diagnostics.
- Model-specific power: dual redundant, polarity-insensitive 12–60 VDC inputs, or a single 85–264 VAC / 110–370 VDC input.
- Industrial installation: standard 35 mm DIN rail, IP40 aluminum alloy enclosure and −40°C to +75°C operating temperature.

Software and Network Functions

Network Functions	
Network redundancy	MW-RingV1/V2; ERPS; STP/RSTP; MRP
VLAN	IEEE 802.1Q VLAN
Traffic control	Port rate limiting; storm suppression and detection
Link aggregation	Static link aggregation; LACP dynamic link aggregation
Quality of service	QoS and traffic prioritization
MAC management	Address binding, filtering, aging and learning limits
Multicast	IGMP Snooping; GMRP
Access control	ACLs; IEEE 802.1X; TACACS+
Management	Web-based management; SNMP; RMON; LLDP
Diagnostics	Loop detection; port mirroring; Ping; DDM; cable diagnostics
Alarms	Traffic threshold, power-loss and link-down alarms
System logs	Log recording, categorization and download; email log support

Technical Specifications

Switching Performance	
Forwarding method	Store-and-forward
Backplane bandwidth	56 Gbps
Packet buffer	4.1 Mbit
Jumbo frames	10 KB
MAC address table	8K entries
Interfaces	
Gigabit SFP slots	8 × 1000Base-X SFP slots; compatible with 100Base-FX operation. Use Maisvch-recommended modules.
Gigabit RJ45 ports	8 × auto-sensing 10/100/1000Base-T(X) RJ45 ports; full/half duplex; auto MDI/MDI-X
Relay alarm	1 × relay alarm output; 3-pin locking terminal block, 3.81 mm pitch
Console port	1 × RJ45 console port with RS232 signaling for configuration and diagnostics
Reset button	Restore factory settings
LED indicators	Power, operation, alarm, fiber port status, and RJ45 port speed and link/activity
Power Requirements	
DC model input	MISCOM7216G-8GF-8GT: Dual redundant, polarity-insensitive 12–60 VDC inputs
AD220 model input	MISCOM7216G-8GF-8GT-AD220: Single 85–264 VAC / 110–370 VDC input
Full-load consumption	DC model: ≤16 W at 24 VDC AD220 model: ≤15.6 W at 220 VAC
Power connection	Locking terminal block, 5.08 mm pitch

Technical Specifications (continued)

Physical Characteristics	
Dimensions	160 × 74 × 122 mm, excluding DIN rail and connectors
Mounting	Standard 35 mm DIN rail
Enclosure / IP rating	Aluminum alloy / IP40
Weight	Approx. 1.04 kg (DC model); approx. 1.12 kg (AD220 model)
Environmental Limits	
Operating temperature	−40°C to +75°C
Storage temperature	−40°C to +85°C
Relative humidity	5% to 95%, non-condensing
Electromagnetic Immunity	
ESD immunity	IEC 61000-4-2, Level 4 Contact discharge: ±8 kV; air discharge: ±15 kV
Surge immunity	IEC 61000-4-5, Level 4 Power: ±4 kV common mode, ±2 kV differential mode Ethernet ports: ±6 kV common mode, ±2 kV differential mode
EFT immunity	IEC 61000-4-4, Level 4 Power: ±4 kV; Ethernet ports: ±2 kV
Protocol Standards	
IEEE standards	IEEE 802.3, 802.3u, 802.3ab, 802.3z, 802.3x, 802.1w, 802.1p, 802.1X, 802.1Q, 802.3ad and 802.1AB
Warranty	
Warranty period	5 years

Dimensions

Unit: mm

DC model

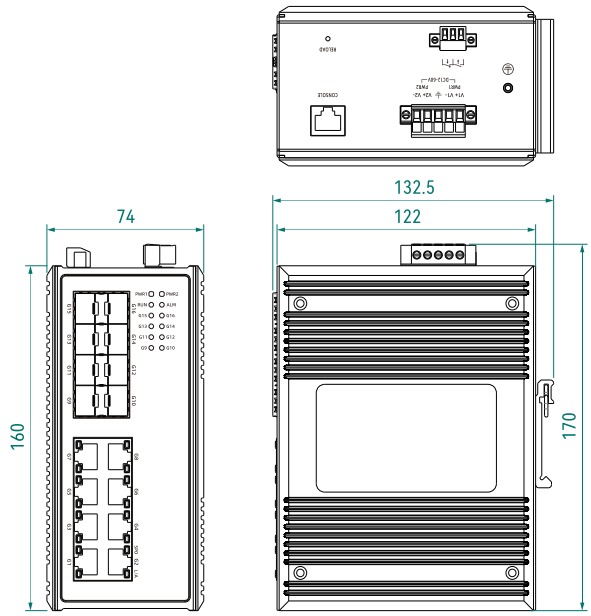

AD220 model

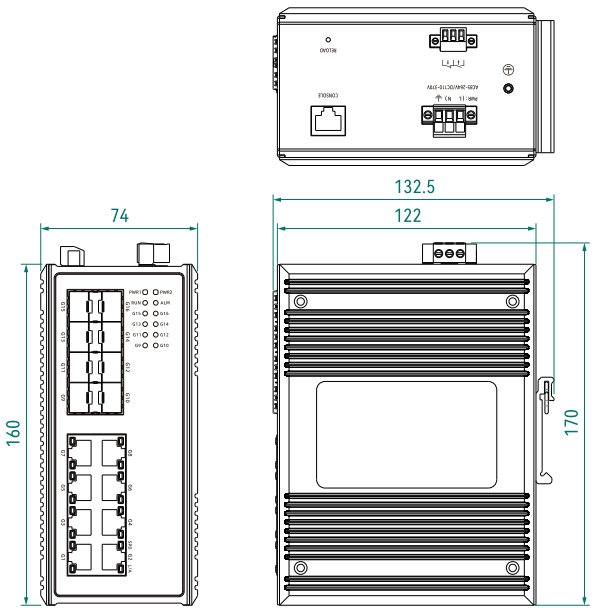

Enclosure dimensions exclude the DIN rail and connectors. Drawings show additional overall dimensions.

Ordering Information

Model	Gigabit SFP slots	Gigabit RJ45 ports	Power input
MISCOM7216G-8GF-8GT	8	8	Dual redundant 12–60 VDC
MISCOM7216G-8GF-8GT-AD220	8	8	Single 85–264 VAC / 110–370 VDC

Contact Us

WUHAN MAISVCH TECHNOLOGY CO.,LTD

Address: No. 079, Room 501, Chuangxinghui Free Trade Finance Building, No.777 Optical Valley 3rd Road, East Lake High-tech Development Zone, Wuhan, Hubei, China.
Mail: sales@maisvch.com
Official site: https://maisvch.com

Copyright © Maisvch Technology All rights reserved